CUSTOMER DRAWING

REV.	DESCRIPTION	DESIGN	APRROVAL	DATE
A1	INITIAL RELEASE	Haojin Sun	Rongzhe Guo	2026.07.10

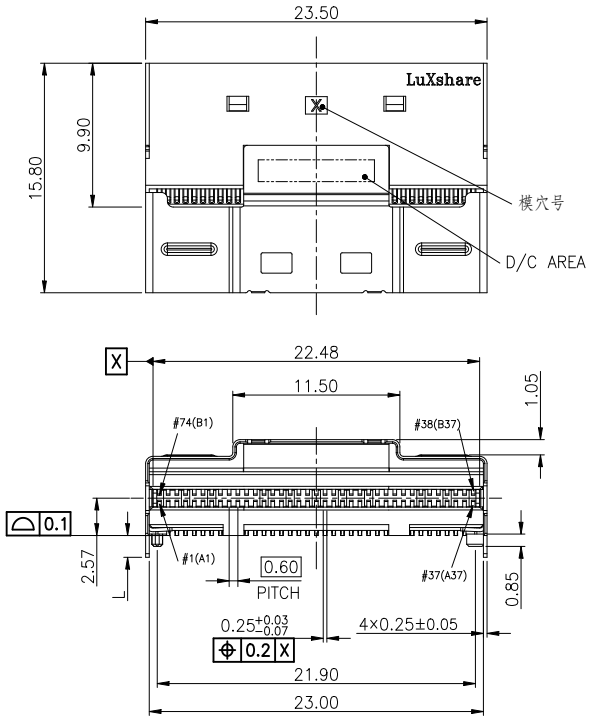

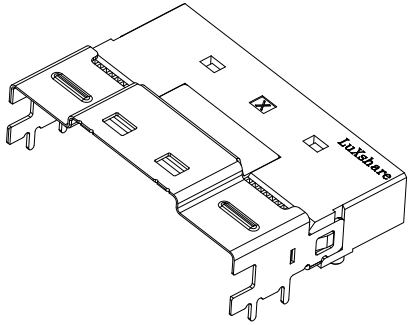

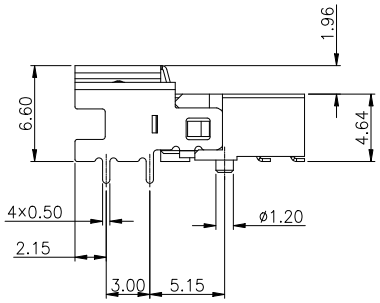

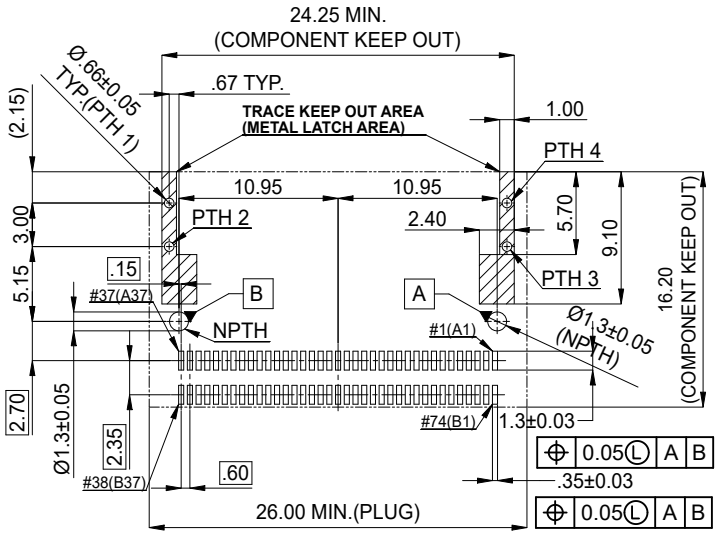

RECOMMENDED PCB LAYOUT
ALL DIMENSIONS TOLERENCE IS 0.05
TOP VIEW

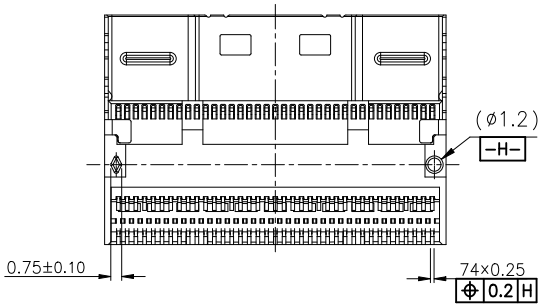

NOTES:
1. MATERIAL:
1.1 HOUSING: LCP, UL94V-0; COLOR: BLACK
1.2 CONTACT: COPPER ALLOY.
1.3 LATCH: STAINLESS STEEL.
2. FINISH:
2.1 CONTACT:
50u" MIN. NICKEL PLATING OVERALL.
15u" or 30u" MIN. GOLD ON CONTACT AREA.
100u" MIN. MATT TIN PLATING ON SOLDER TAIL.
2.2 LATCH:
50u" MIN. NICKEL PLATING ON SOLDER AREA.

3. HALOGEN-FREE PRODUCT P/N:
PSL060-744 * -B * 1- 1 H
CONTACT AREA PLATING:
3: 30u" GOLD ON CONTACT AREA.
7: 15u" GOLD ON CONTACT AREA.
PACKAGE METHOD:
1: TAPE & REEL
LATCH PIN LENGTH OPTIONS:
0: L= 1.50mm
1: L= 2.20mm
2: L= 3.00mm
3: L= 4.20mm

X.± 1	X.°±3°
.X± 0.30	.X°±2°
.XX± 0.20	.XX°±1°
.XXX± 0.10	.XXX°±0.5°
UNITS:	mm

THESE DRAWINGS AND SPECIFICATIONS ARE THE PROPERTY OF LUXSHARETECH AND SHALL NOT BE REPRODUCED, COPIED OR CUED IN ANY MANNER WITHOUT THE PRIOR WRITTEN CONSENT OF LUXSHARETECH

PART NO.: PSL060-744 * -B * 1-1H

TITLE: SLIMSAS X8 R/A RECEPTACLE 74 POSITION

APPD: Rongzhe Guo

CHKD: Hengshan Cheng

DRAW: Haojin Sun 2026.07.10

LUXSHARETECH

CUSTOMER P/N: N/A

DWG NO: PSL060-7443-B01-1H-000

SCALE	SHEET	REV.
1:1	1/1	A1